Andiva Tech BV

info@andivatech.com
www.andivatech.com

MTEnergy technology: An enabler for advanced measurement and control features in RF/MW energy applications

Atanas Pentchev

a.pentchev@andivatech.com

Introduction

The advent of high-power solid-state RF/MW generators has revolutionized RF/MW energy applications, allowing for functionality and performance previously unattainable with the incumbent RF energy technologies.

The presented MTEnergy technology marks a next step in the development of the solid-state [SS] RF/MW energy systems, and provides path for features enrichment and performance enhancement.

This paper offers an introduction to MTEnergy technology in three parts:

Part 1: An overview of the contemporary Solid state RF/MW energy systems, which scrutinizes the currently deployed architectures, compares their capabilities, and identifies functionality and performance points for improvement.

Part 2: Introduction to the MTEnergy technology – elaborates the fundamental principles of MTEnergy technology and reveals some implementation options.

Part 3: Showcases architectures of RF/MW energy systems and generators in prospective applications, which stand to benefit from the integration of MTEnergy technology.

Invented by AndivaTech

info@andivatech.com
www.andivatech.com

Part 1 - RF/MW Energy systems

1.1 Solid state RF/MW energy systems

In comparison to the incumbent RF energy generators, , which utilize vacuum devices, the SS generators offer benefits in several aspects:

- accurate and agile control of all parameters of the deployed RF/MW power (frequency, phase, power level and timing)
- flexible control of important for the system's operation parameters (i.e. EM field distribution in the energy application area)
- reliability, lifetime, ease of use (lower supply voltage, EMC, etc.)
- scalability of the delivered RF power by combining the energy from multiple RF sources in front, or directly in the applicator. Fig.1. demonstrates an example of the latter scenario.

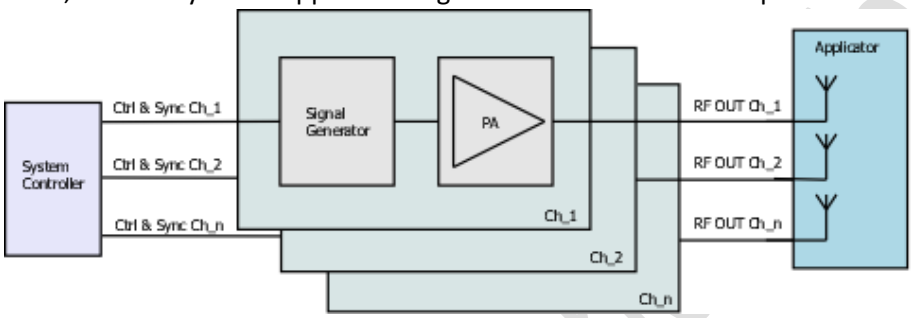

Figure.1. Simplified block diagram of a multi-channel RF energy system

Those SS generators features enable a range of architectural options for the design of the energy systems, which can be categorized based on the following functional criteria:

- number of independently controlled RF sources
- multi- or single- frequency operation, the later typically necessitating coherent channel operation
- open or closed loop control techniques
- continuous or pulse deployment of the delivered energy
- parameter used in the control of the RF power level: supply voltage, RF gain or time-slots
- methods for compensation of the effects, caused by the changing load conditions: frequency tracking or impedance matching

Let's delve into the reasons for applying the listed criteria.

The system can comprise one or more channels, which independently deploy the RF energy into its application area. The characteristics (frequency, phase, power, etc.) of the energy, provided by the individual channels, can be identical or varied. For example, different channels might deliver energy at different frequencies, a scenario useful for profiling the cross-section of the thermal effect in bulk materials undergoing dielectric heating. Conversely, if multiple channels operate coherently at the same frequency, trimming the relative phases and amplitudes, offers a technique for controlling the electromagnetic field throughout the applicator's volume.

The control of the signal parameters (power and phase) can be implemented based on feedback signals, sampled in the applicator or in other system's building blocks, and operate in a closed loop. Alternatively, control algorithms can be based on information obtained from prior characterization (calibration) of the system's components, without relying on feedback signals.

Invented by Andiva Tech

The applied average RF power can be controlled by regulating the amplitude of the generated RF signal: by varying the gain of the generator's RF lineup, or by altering the RF power amplifiers' supply voltage. Alternatively, the control algorithm can regulate the duration of power delivery to the application, for instance, by applying a pulse-width modulation [PWM] scheme.

In certain applications, the flexibility of adjusting the frequency of the SS generators proves valuable means for adapting the system's performance to the changing load conditions during the process execution. This approach can either complement or circumvent the use of tunable impedance matching devices.

The various techniques, implementing the discussed functionality features, can be combined in numerous ways. Therefore, the number of architectural options for the RF energy systems' design is substantial, and the attempts for systematic analysis and comparison of their features and performance would always appear to be incomplete.

Nevertheless, Appendix 1. presents an evaluation of few architectural options, which are derived from the combinations of a limited set of system characteristics: number of RF channels, number of used frequencies and coherency, and type of parameter's control. It also outlines additional HW and control requirements, imposed by the targeted functionality. For simplicity, the summary does not consider "mixed" architectures, i.e. where the power control scheme is implemented simultaneously in the amplitude- and in the time-domains.

This evaluation summary illustrates that, the highly customizable solid-state system architectures offer a sufficient number of options to achieve the desired performance vs. cost ratio.

It also suggests, that the most compelling and feature reach architectures support coherent channel operation and closed-loop amplitude and phase control. Similar architectures require more complex HW and control provisions. The following section will demonstrate an example of a similar generator architecture.

1.2 RF/MW energy SS generator for coherent applications

Fig. 2. illustrates a simplified block diagram of a minimal RF architecture of an RF generator, which is suitable for operation in coherent, multichannel systems. The architecture contains only four active RF components: VCO/PLL, DCA and PA in the transmitter path, and IQ demodulator in the receiver path.

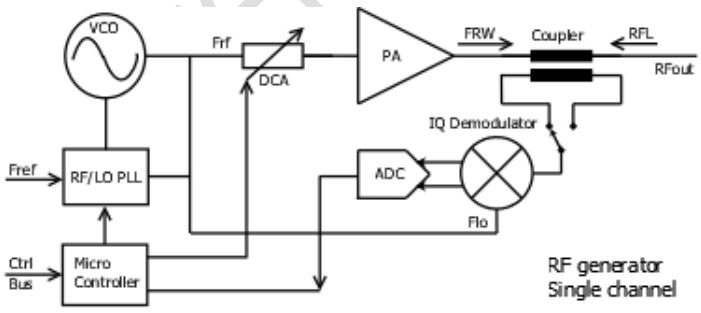

Figure 2. An example of a single channel RF generator, providing closed-loop phase and amplitude control

The RF signal is generated by a PLL, which is synchronized with an externally generated low-frequency reference signal – denoted as Fref. To ensure phase coherence, this signal needs to be distributed to all RF generators within the energy system. Effective phase control demands specific

PLL functions related to phase adjustment and synchronization. These functions ensure that RF signals are generated with adjustable phase during operation, and eventually, sets a predictable initial phase upon resetting. Typically, these functions are realized with additional frequency dividers and control registers incorporated into more advanced PLL/VCO ICs.

The amplitude of the generated RF signal – F_{RF}, which is controlled with a high-resolution, digitally controlled attenuator – DCA, is subsequently amplified by the power amplifier.

Finally, directional coupler samples both the incident (FRW) and reflected (RFL) signals at the generator's output. Those signals are used in the control loops, governing the amplitude and the phase of the generated signal. The sampled signals are down-converted (one at a time) by an IQ demodulator to DC IQ signals, which are quantized by a dual-channel ADC. A microcontroller uses those quantities to calculate the phase and the amplitude of the analyzed signals and applies them in the closed-loop control algorithms.



Figure 3. AT5g8Gen200 5.8GHz generator

Despite some performance limitations, i.e. step-wise power control, this relatively straightforward architecture is able to fulfill the requirements set by a significant portion of multi-channel, coherent RF energy systems.

AndivaTech's AT5g8Gen200 5.8GHz generator, shown on Fig.3., is an example of the discussed architecture (the phase measurements being an optional feature).

1.3 Functionality and performance gaps in the state-of-art architectures

Certainly, the RF energy applications don't necessitate the level of precision and reliability akin to the "James Webb telescope." Nevertheless, many applications do require a significant performance level. In numerous instances, heightened requirements revolve around the precision of the control algorithms and the supporting measurement functions. These demands often surpass what the existing state-of-the-art architectures and measurement techniques can adequately address.

For instance, Fig. 4. depicts a 2-channel energy system, in which both channels concurrently contribute power to an applicator, where significant cross-talk between the channels takes place.

The RFLx signals, sampled in the output branch of the couplers, contain the combination of the reflected signals (RFLx) and the signals (Sx_Rx), propagated between the channels in the applicator. When the coherent channels operate simultaneously, the sampled signals become ambiguous and unsuitable for use in the control algorithms.

Invented by AndivaTech

For example, if the parameters of the processed in the applicator object change during operation, it wouldn't be possible, without interrupting the executed process, to determine whether the observed Sx_Rx change is due to the variation of the applicator's reflection coefficient, or because the transmission conditions have been altered.

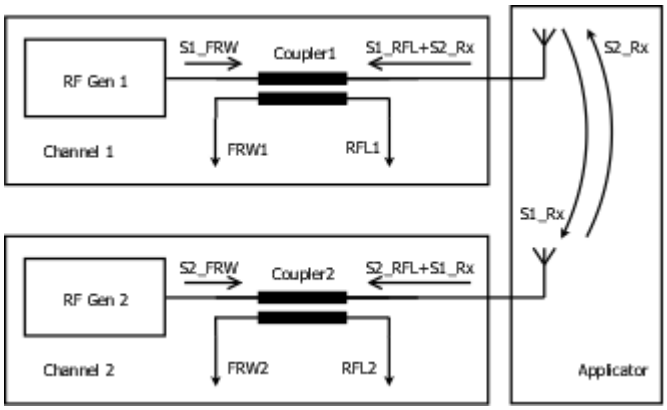

Figure 4. A 2-channel energy system with inter-channels crosstalk

As a result, the existing multi-channel, coherent architectures are only able to detect gross changes occurring in the executed process. They, however, lack abilities to pinpoint the exact source of the detected alternation. That it is problematic to decide in a real-time, and without causing process interruptions, on appropriate corrective measures. This deficiency stems from the fact, that the applied measurement techniques can quantify only the parameters of the combined RF signal, while the parameters of the signals, contributed by the individual RF channels remain obscure.

Part 2 of this paper introduces MTEnergy technology, invented to address the explained deficiency. The technology enables the implementation of advanced measurement and control features, such as in-process characterization of the applicator's parameters, or/and closed-loop control of the EM field distribution, required to maintain or avoid local hotspots in the processed material/volume.

Invented by AndivaTech

Part 2 - MTEnergy technology

The patent pending MTEnergy (Multi-Tone Energy) technology enables the measurement of all individual signals, contributed by the multitude of RF sources constituting the multi-channel energy systems. The analyzed signals can be sampled in any chosen point of the system. Importantly, the technology introduces no or minimal disturbances in the system's operation and performance.

The foundation of MTEnergy technology lies in the utilization of multi-tone RF signals, which enable an unambiguous identification and measurement of the individual signals in the presence of other coherent ones.

2.1 MTEnergy technology in brief

The multi-tone signals(S_{MT}) consist of a large-signal tone (S_{LS}), and several small-signal ones (S_{SS}). The high power tone - S_{LS}, generated at common for the system frequency - F_{RF}, is phase coherent with the S_{LS} tones* of the other RF channels. The small-signal tones are generated on unique and channel-specific frequencies, and their parameters (both phase and amplitude) are correlated to the parameters of S_{LS}.

*NOTE: In reality, many applications do not require (and, in certain cases, it might be even not preferable) to utilize S_{MT} signals simultaneously across multiple RF channels. Channels not currently under analysis can generate CW signals, which, naturally, should remain phase coherent with the S_{LS} tone of the analyzed channel(s).

MTEnergy technology capitalizes on three key properties of the multi-tone signals:

- The measured MT signal's S_{LS} tone carries almost all RF energy generated in the analyzed channel. It is phase coherent with the other RF signals employed in the system and contributes in the creation of the planned EM-field intensity and pattern.
- The S_{SS} tones, belonging to the analyzed MT signal, can be unambiguously discriminated and measured based on their unique frequencies.
- Using the correlation relationship between the parameters of the tones of the analyzed MT signal, the parameters of the respective S_{LS} tone, which are of major interest in the control algorithms, can be computed from the already obtained parameters of the S_{SS} tones.

2.2 MTEnergy technology – foundation

2.2.1 Generation of the multi-tone signals

The RF multi-tone signals (S_{MT_RF}) can be generated in multiple farms and ways. An important point to consider is that the S_{MT_RF} signals are typically amplified with non-linear or saturated amplifiers. In order to preserve their signal integrity, they shall possess a constant envelope. An effective technique for generating similar MT signals is angle (phase or frequency) modulation.

Harmonic signals appear to be an obvious choice, however other waveforms might be also suitable. The choice of modulation signals (frequency and waveform) is primarily constrained by the limitations imposed by the ability of the used circuit topology.

Modulation frequencies can range from a few KHz to tens of MHz, and the specific choice should align with the intended functionality. For example, the hot S-parameter measurement technique, as discussed later, might benefit from using a higher modulation frequency. In contrast, if the goal is to measure the parameters of the RF signals (S_{LS}) or the S-parameters of the application on F_{RF}, a lower modulation frequency should be employed.

Invented by AndivaTech

The selection of the amplitude of the modulation signal (modulation index), involves balancing two opposing requirements:

- The amplitude should be low enough to prevent significant spreading of the channel's power between the S_{LS} and S_{SS} tones. A higher modulation index would lead to combination loss when signals from multiple channels are combined in the application, and impose undesired amplitude modulation onto the combined signal.
- Conversely, the amplitude should be large enough to ensure, that the analyzed S_{SS} tones can be measured accurately.

As a general guideline: the modulation signal's amplitude should be < 0.1.

Considering the case of phase modulation using a harmonic signal, the multitone signal will take the form:

$S_{MT_RF} = A_{RF}\cos(2\pi F_{RF}t+\phi_{RF} + S_{MOD})$ (Eq.1.),

where:

F_{RF} is the RF frequency (common for all channels),

A_{RF} and ϕ_{RF} are the amplitude and the phase of the RF carrier used in the analyzed hannel,

S_{MOD} is the used harmonic modulation signal:

$S_{MOD} = A_{MOD}\cos(2\pi F_{MOD}t+\phi_{MOD}))$ (Eq.2.),

where:

A_{MOD}, F_{MOD} and ϕ_{MOD} are respectively amplitude, frequency and phase of the modulation signal (multiple modulation signals can be used, as well).

Assuming small A_{MOD}, the resulting S_{MT} tones are described with Bessel functions of first kind, and their amplitudes are:

$$cn = \frac{1}{2\pi}\int_{-\pi}^{\pi} e^{-j\,(\beta\sin(x)-nx)}\,dx = J_n(\beta)$$ (Eq.3a.),

where:

n is the tone's integer index*

*NOTE – the applied phase modulation yields a symmetric spectrum around the carrier, thus using only the positive indexes is sufficient,

$x = 2\pi F_{MOD}t + \phi_{MOD}$ is the instant phase of the modulation signal,

$\beta = A_{MOD}$ is the modulation index,

J_n is Bessel function of first kind, n^{th} order.

The multi-tone signal components' phase is described by:

$\phi_n = \pi/2*abs(n) + \phi_{MOD}*n + \phi_{RF}$, (Eq.3b.),

where:

n is the tone's integer index.

Invented by AndivaTech

Assuming a small modulation index, the resulting phase modulated multi-tone signal will have three significant tones appearing on F_{RF} - F_{MOD}, F_{RF} and F_{RF} + F_{MOD} frequencies.

Example 1, shows the parameters of MT signal, obtained with phase modulation.

Example 1

A phase modulation with parameters:

A_{RF} =1, ϕ_{RF} = 60°, A_{MOD} = 0.145 and ϕ_{MOD} = 45°,

produces tones with parameters :

S_{SS-1} (@F_{RF}-F_{MOD1}): amplitude: 0.07231, phase 105°

S_{LS} (@F_{RF}): amplitude: 0.99475, phase 60°,

S_{SS-1} (@F_{RF}+F_{MOD1}): amplitude: 0.07231, phase 195°.

Thus, S_{SS} tones' levels are about 23dB lower then S_{LS}'s one.

Since, S_{MT} could be conveniently generated using IQ modulation technique, it is necessary to derive S_{MOD}' parameters also in Cartesian (IQ) form.

Substituting S_{MOD} in Eq.1. with Eq.2., and IQ demodulating the output with F_{RF}, provide the analytical form of the sought IQ waveforms. The obtained results contain low- and high-frequency terms. Omitting the high frequency terms (they would cancel each other in the IQ modulation process), the IQ signals are given by:

$I_{MOD} = \cos(S_{MOD})$ (Eq.4a.),

$Q_{MOD} = \sin(S_{MOD})$ (Eq.4b.).

After expanding Eq.4a. and Eq.4b. in Taylor series, the IQ signals can be presented In the form:

$I_{MOD} = 1 - S_{MOD}^2/2! + S_{MOD}^4/4! - S_{MOD}^8/8!...$ (Eq.5a.),

$Q_{MOD} = S_{MOD} - S_{MOD}^3/3! + S_{MOD}^5/5! +...$ (Eq.5b.).

With low A_{MOD}, all terms containing S_{MOD} on a power higher than 2 could be neglected in most applications.

Note: The Cartesian signals have higher frequency tones then the original S_{MOD}, therefore require using DAC's (Digital-to-Analog Converters) with higher sampling rate.

The parameters of the multi-tone signals will change, as they propagate in the system, however the correlation between the parameters of S_{LS} and S_{SS} will remain constant (providing low F_{MOD} is used). Once the parameters of any of the S_{SS} tones are measured, the S_{LS} parameters can be calculated, as will be discussed in the following paragraphs.

Estimating the parameters of the sampled small-signal tones

A sample of the combined RF multi-tone signals can be taken anywhere in the energy system—i.e. by directional couplers in the RF channels, or by dedicated probes in the applicator.

The processing of the sampled signals typically involves techniques and architectures widely used in the RF communication receivers. Depending on the RF frequency, used in the application, the processing can be implemented either entirely or partially in the analog and/or digital domains. For instance, in the HF (High Frequency) ISM (Industrial, Scientific and Medical) bands, the analyzed S_{MT}

Invented by AndivaTech

could be directly digitized using high sample rate ADCs (Analog-to-Digital Converters). In the higher RF and MW bands, however, the analyzed signal is typically first converted down to a baseband frequency, and then digitized. The latter approach is more general, and its digital signal processing (DSP) algorithms closely resemble the entirely digital approach. Therefore, it will be in focus of the latter discussions.

As illustrated by Fig. 5, it is convenient (though not mandatory) to use an IQ demodulator in the down-conversion step. A zero-IF demodulation (F_{LO} equal to F_{RF}) would be the preferred technique in applications using low frequency modulation (F_{MOD}). However, in cases where high F_{MOD} is applied - such as in hot S-parameter measurement, where F_{MOD} could be in the range of tens of MHz - it might be more convenient to use F_{LO} close to $F_{RF} \pm F_{MOD}$. The architecture of the receiver path shown in Fig. 5 is capable of operating in both modes, as the LO signal is delivered by dedicated PLL/VCO circuitry.

The IQ baseband signals include the down-converted RF S_{SS} signals, which, in case of zero-IF conversion, appear at $\pm F_{MOD}$. Various DSP techniques can be employed to estimate the parameters of the analyzed S_{SS}. One approach is the Complex Fast Fourier Transform (CFFT) algorithm, which outputs the complex parameters (amplitude and phase) of all present small-signal tones in the respective bins. The zero bin contains the parameters of the combined large-signal tones, which might serve other purposes, such as verifying whether the level of the combined signal aligns with the applied settings.

Alternatively, synchronous digital (IQ) demodulation with F_{MOD} can be applied. This approach is more efficient (requires less DSP resources), but estimates only the parameters of the S_{SS} located at F_{MOD} frequency.

The subsequent step encompasses utilizing the estimated S_{SS} parameters in calculating the parameters of the corresponding S_{LS} tones and applicator's S-parameters.

2.2.2 Deriving the parameters of the S_{LS} tones

S_{LS} parameters can be calculated using the identities from Eq. 3a and Eq. 3b. For instance, if the previously estimated S_{SS} parameters on $F = F_{RF} + F_{MOD}$ are A_{SS} and ϕ_{SS}, the S_{LS} amplitude (A_{LS}) and phase (ϕ_{LS}) are given by:

$$A_{LS} = A_{SS} * C_{LS} / C_{SS} \qquad \text{(Eq.6a.)},$$

$$\phi_{LS} = \phi_{SS} - \pi/2 - \phi_{MOD} \qquad \text{(Eq.6b.)}.$$

2.2.3 Calculating applicator's S-parameters

The calculation of the S-parameters will be exemplified using the 2-channel system shown on Fig.4.

The directional coupler in Channel1 (coupling factor C_{PL}) samples 2 signals:

- $FRW1 = C_{PL} * S1_FRW$ in the forward path,
- $RFL1 = C_{PL} * (S1_RFL + S2_Rx)$ in the reflected path.

Assuming the RF multi-tone signals S_{MT1} and S_{MT2} are generated using respectively (A_{LP1} ϕ_1, A_{MOD1}, F_{MOD1}) and (A_{LP2} ϕ_2, A_{MOD2}, F_{MOD2}), the sampled signals can be written in the following form:

$$FRW1 = C_{PL} * A_{RF1}\cos[2\pi F_{RF}t+\phi_1 + A_{MOD1}\cos(2\pi F_{MOD1}t)] * G_1 \qquad \text{(Eq.7a.)},$$

$$RFL1 = C_{PL} * (S1_RFL + S2_Rx) = C_{PL} * \{A_{RF1}\cos[2\pi F_{RF}t+\phi_1 + A_{MOD1}\cos(2\pi F_{MOD1}t)] * G_1 * S_{11} + A_{RF2}\cos[2\pi F_{RF}t+\phi_2 + A_{MOD2}\cos(2\pi F_{MOD2}t)] * G_2 * S_{12}\} \qquad \text{(Eq.7b.)},$$

Invented by AndivaTech

where G_1 and G_2 are the (complex) gains of the power amplifiers in the respective channels.

Obviously, FRW1 and RFL1 are MT signals. After downmixing and demodulating both signals (FRW1 and RFL1) with F_{MOD1}, the complex parameters of the forward and reflected small-signal tones can be estimated - S_{SS1_FRW} from FRW1, and S_{SS1_RFL} from the first term of RFL1. Since the second term of RFL1 doesn't have a small-signal tone on F_{MOD1}, it won't contribute to the demodulation result. The measured values of S_{SS1_FRW} and S_{SS1_RFL} can be presented as:

$S_{SS1_FRW} = A_{SS1_FRW} * e^{j\phi SS1_FRW}$, (Eq.8a.),

$S_{SS1_RFL} = A_{SS1_RFL} * e^{j\phi SS1_RFL}$, (Eq.8b.),

and, the applicator's reflection coefficient, seen from output of Channel1 is:

$S_{11} = S_{SS1_RFL} / S_{SS1_FRW} = (A_{SS1_RFL} / A_{SS1_FRW}) * e^{j(\phi SS1_{RFL} - \phi SS1_{FRW})}$ (Eq.9.).

In a similar way, if one downmixes and demodulates the sampled S1_RFL and S2_FRW with F_{MOD2}, the parameters of L_{SS2_Rx} and L_{SS2_FRW} small-signal tones can be measured, and S_{12} calculated as:

$S_{12} = S_{SS2_Rx} / S_{SS2_FRW} = (A_{SS2_Rx} / A_{SS2_FRW}) * e^{j(\phi SS2_{Rx} - \phi SS2_{FRW})}$ (Eq.10.).

It is worth to emphasis, that there is no need to generate MT signals simultaneously in both channels. For instance, when the small-signal tones originating from Channel1 are analyzed, Channel2 can generate CW signal.

In that case, the system can use a single modulation frequency for MT signals generation in all channels, providing that only one channel generates a multi-tone signal a time. This observation is of a large significance for developing cost-effective implementation options of MTEnergy technology.

2.3 MTEnergy technology implementation

As mentioned previously, MT signals can be generated and processed using various techniques. The following paragraphs will present two options for generating MT signals, accompanied by discussion of some practical aspects to be considered during the MTEnergy technology's implementation.

2.3.1 Generation of MT signal in HF (High Frequency) band

Fig. 5. depicts an RF/MW generator architecture employing MTEnergy technology within the framework of a 2-channel energy system. This architecture employs phase modulation using a Direct Digital Synthesis (DDS)/pattern generator device. The HF or VHF (Very High Frequency) S_{MT} signal is generated at frequencies up to a few tens of MHz.

In the scenario, where this architecture is applied in an HF or VHF ISM band generator, the DDS can directly synthesize the output RF signal, rendering the PLL/VCO blocks shown in Fig. 5. redundant. Consequently, the RF MT signal is directly synthesized from a waveform computed with Eq. 1.

Invented by AndivaTech

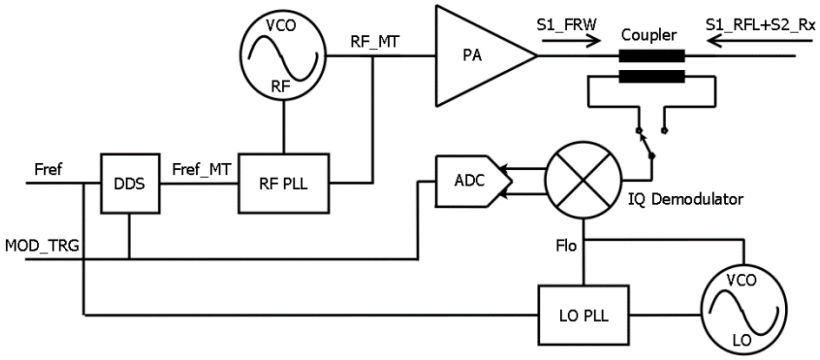

Figure 5. Block diagram of MTEnergy generator architecture with DDS/pattern generator

In the more general case, where the generator produces higher RF frequencies, the output RF signal is generated by PLL/VCO device. In this case, the DDS provides the PLL with a reference signal, which is a MT signal (S_{RF_MT}) as per Eq. 1. F_{REF_MT} may or may not equal the CW F_{REF} signal's frequency. The description of the output RF MT signal is given by:

$$S_{RF_MT} = A_{RF_MT}\cos(S_{MT_REF} * N + \phi_{RF}) = A_{RF_MT}\cos[(2\pi F_{RFF_MT}t + S_{MOD}) * N + \phi_{RF}] =$$
$$= A_{RF_MT}\cos\{[2\pi F_{RFF_MT}t + A_{MOD}\cos(2\pi F_{MOD}t + \phi_{MOD})] * N + \phi_{RF}\} \quad \text{(Eq.11.)},$$

where: $N = F_{RF}/F_{REF_MT}$ is the ration of the frequency divider in PLL's feedback path (assuming no frequency dividers/multipliers are used in PLL's reference path)

Eq.11. makes evident, that S_{RF_MT} tones: S_{LS} and S_{SS}, remain spaced with F_{MOD}, albeit with a larger modulation index, denoted as $A_{MOD} * N$. In order to achieve the same amplitude ratio between the generated RF S_{LS} and S_{SS}, as determined with Eq.1. and Eq.3a., A_{MOD} in Eq.11. should be divided with a factor of N.

In order to preserve the modulation's integrity is important to keep F_{MOD} within the PLL's bandwidth, which is typically well below 100KHz.

This architecture offers significant potential for cost optimization. A single S_{REF_MT} signal can be generated and used across the whole RF energy system. S_{REF_MT} can be "easily" distributed amongst the RF channels of the system, along the CW F_{REF} and the modulation trigger signal - MOD_{TRIG}. In this scenario, the RF generators resemble the conventional generator architecture shown in Fig. 2. The only additional component needed is a multiplexer selecting the low-frequency reference signal between S_{MT_REF} and F_{REF}, depending on whether the signal of the channel is currently measured or not.

2.3.2 Generation of RF MT signal

As mentioned previously, IQ modulation technique could be alternatively used for generating RF MT signals, as illustrated in Fig. 6.

MT modulation waveform is generated using an IQ DAC according to Eq. 5a and Eq. 5b. The RF_MT signal is obtained by modulating the RF Carrier (RF_CW) with the IQ waveforms. The RF_CW carrier, generated by PLL and VCO, also serves as a LO signal for the IQ demodulator in the receiver path.

Invented by Andiva Tech

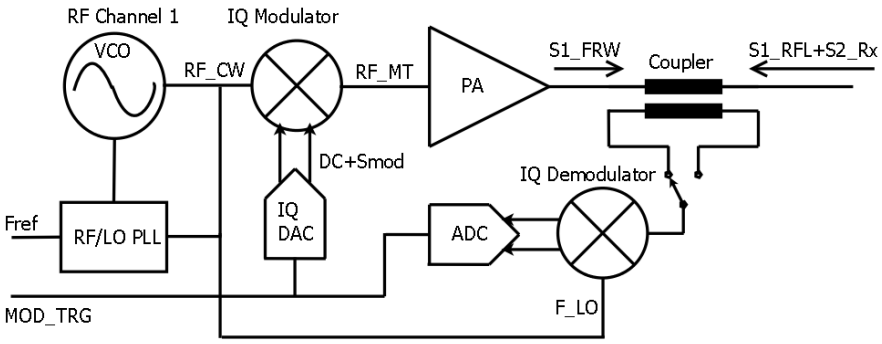

Figure 6. Block diagram of MTEnergy generator architecture with IQ modulator

Particular features of this approach:

- It allows a simple switching between the generation of CW or MT RF signal - if the IQ DAC outputs only DC voltages, the RF_MT signal will turn into a CW one.
- No strict frequency (F_{MOD}) limitations on the used IQ waveforms. The ability to employ higher frequencies is useful in implementing the hot S-parameter measurement technique.
- In the particular implementation, shown on Fig.6, the analyzed RF S_{MT} signals are mixed down to zero_IF baseband ($F_{LO} = F_{RF}$). When the technology is used for realizing hot S-parameter technique, an F_{LO} closer to the frequency of analyzed S_{SS} ($F_{RF} \pm F_{MOD}$), could be desirable in order to reduce the bandwidth of the analyzed baseband signal. In that case a dedicated PLL/VCO would be required to generate the F_{LO} signal used in the receiver.

2.3.3 Practical aspects of MTEnergy technology implementation

While the MTEnergy technology is designed such, that it causes no or minimal unwanted impact on the executed in the system process, few aspects must be considered to further mitigate the remaining adverse effects.

Critical factors to consider are the number of MT signals employed in the system and their time of deployment.

As previously discussed, individual MT signals possess a constant envelope. However, the summation of multiple MT signals, generated with coherent carriers and varying modulation frequencies, results in a potentially undesired amplitude modulation.

Assuming equal amplitudes (A_{RF}) and modulation indexes (A_{MOD}) for all deployed S_{MT} signals, the amplitude of the resulting AM modulation is given by:

$$A_{AM} = \frac{n}{N} * [1 - \cos\left(\frac{Amod}{2*\pi}\right)] \quad \text{(Eq.12.)},$$

where:

N is the number of active channels, n of which generate S_{MT} signals.

Therefore, in order to maintain A_{AM} small*, A_{MOD} should preferably be below 0.1, and only one or few channels should use S_{MT} signals.

Note*: if A_{MOD} <0.1, the maximal A_{AM} is minor anyway ~ 0.5%.

In certain application scenarios, the executed processes may demand rapid measurement and control of the regulated RF signals. To minimize measurement time, such cases might necessitate the use of higher modulation index (A_{MOD}) to ensure a high Signal-to-Noise (S/N) ratio of the

Invented by Andiva Tech

analyzed S_{SS}, and also, simultaneous analysis of multiple MT signals. A remedy in this scenario would be to employ the S_{MT} signals in short bursts, and generate CW RF signals for the majority of the time.

Appendix 2. depicts a spectrogram of MW MT signals, generated by a two channel, 5.8 GHz demonstrator, which makes use of generators based on the architecture shown on Fig. 5.

Invented by AndivaTech

Part 3 - MTEnergy technology application examples

This part highlights the advantages offered by the MTEnergy technology in number of RF/MW energy applications and generators.

3.1 MTEnergy technology in high-power RF/MW generators

The application of MTEnergy technology enables performance enhancement and cost optimization of the high power generators targeting RF energy applications.

Some of those application can be powered by a single RF generators, which should deliver power levels exceeding the capabilities of the available RF power devices. To produce that power level, the generator must combine the signals of few RF line-ups, as shown on Fig.7.

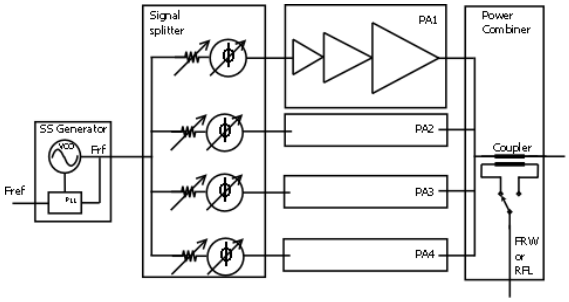

Figure 7. Block diagram of a 4-channels, high power solid-state RF generator

The RF line-ups, particularly in the higher frequency bands, especially in S and C bands, tend to experience substantial parameters spread. This variability leads to considerable combination loss, causing performance degradation and generator design difficulties. State-of-the-art architectures address this issue through features like amplitude and phase equalization, implemented in the signal splitter in front of the power amplifiers. These features aim to match the amplitudes and phases of the signals outputted by the individual channels, thereby evading the occurrence of combination loss. However, the effectiveness of this approach heavily relies on extensive calibration. Parameters of all components: splitter, RF line-ups (phase shifters, attenuators, PAs), and power combiner, need to be calibrated in multiple domains: frequency, power, temperature, and supply voltage. Despite the meticulous calibration efforts, the approach has inherent drawbacks. Calibration can only be performed at component level, and any performance deviation, that emerge upon integration into the system cannot be detected by the employed open-loop control algorithms.

To address these drawbacks, additional directional couplers and phase/amplitude detectors, i.e. IQ demodulators, can be added to the outputs of the RF line-ups. The additional HW enables closed loop phase and amplitude control in the individual line-ups. However, apart from the increased complexity, the control loops still rely on calibration data of the power combiner—a component remaining outside the loops. More crucially, the control loops are still susceptible to parameter variations in the feedback paths- directional couplers and IQ demodulators.

All those problems are circumvented in the generator architectures, enabled by MTEnergy technology. Fig.8 demonstrates one possible embodiment.

In this architecture, the single channel small-signal RF source and the signal spitter from Fig.7, are replaced with a 4 channel small-signal (SS) generator. The generator utilizes two low-frequency F_{REF} signals: F_{REF_CW} and F_{REF_MT}, which are multiplexed at the inputs of each PLL. F_{REF_CW} is principally used, while F_{REF_MT} is selected when the signal's parameters of the respective line-up are measured. The

Invented by AndivaTech

measurement device comprises of a directional coupler at the generator's output, and an IQ demodulator, which LO signal is supplied by a dedicated PLL/VCO. The closed-loop control algorithms, aimed at matching the parameters of the signals delivered by the 4 channels, execute seamlessly and safeguard the uninterrupted generator operation. Because all measurements are performed by a single measurement device, and on signals, sampled in the same point, no calibration of the channels is required whatsoever. In most cases, one F_{REF_MT} signal will suffice, as far as, there is no need to measure simultaneously the signals generated by multiple channels. Another important benefit of this architecture would be, that the amplitude and phase measurement, performed on the MT (or CW) output RF signals, can be used by the close-loop power and phase control algorithms, governing the operation of the complete generator.

This architecture is especially well suited for applications with lower Frf to Fref ratio, where an eventual small misalignment between the Fref_CW and Fref_MT phases wouldn't be harmful.

Obviously, a bit more complex, however universal and without limitations, architecture could be made when a fast DDS generates (phase-continuously) both Fref signals per individual channels.

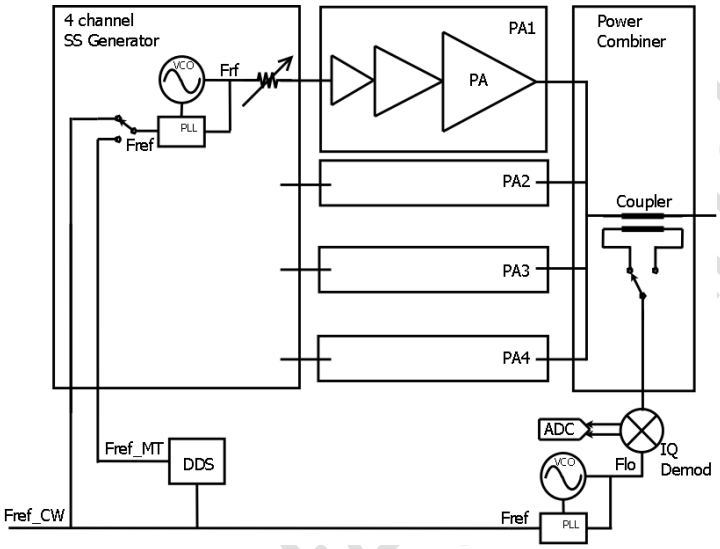

Figure 8. Block diagram of a 4-channels, MTEnergy-enabled high power solid-state RF generator

Appendix 3. shows some measurement results, obtained from AndivaTech's two-channel 5.8 GHz MTEnergy demonstration platform. The revealed results demonstrate the system's performance, when the channels' phases are controlled in closed-loop, using the measured 5.8GHz MT signals.

3.2 MTEnergy technology in surfaguide MW plasma sources

A surfaguide generator comprises a waveguide applicator and a discharge tube, penetrating through the center of the applicator. The waveguide applicator has two ports. Typically, the surfaguide source is powered with MW energy provided by a magnetron generator, connected (via a directional coupler and a tuner) to one of the ports. The other port is loaded with a tunable short, which ensures, that the maximum (E-field) of the standing wave coincides with the axis of the discharge tube.

However, this configuration is not optimal for generating plasma in the entire cross-section of the discharge tube. The non-symmetric excitation confines the plasma to the portion of the tube facing the magnetron [2].

Invented @ AndivaTech

Symmetric plasma excitation could be achieved by providing RF energy via both surfaguide's ports, using two coherent microwave generators. A schematic representation of a similar system is depicted in Fig. 9.

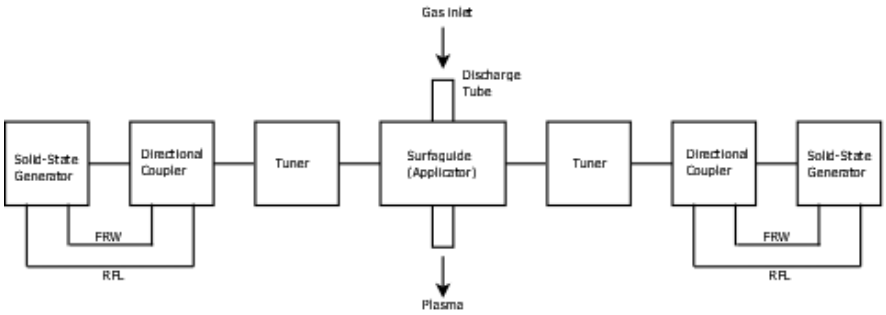

Figure 9. Surfaguide plasma sources enabled by MTEnergy technology

The FRW and RFL signals, obtained via the directional couplers on both sides of the applicator, contain samples of the signals, generated by both generators. MTEnergy technology makes possible to differentiate them and individually measure their parameters, therewith, to enable the phase/amplitude synchronization of the generators, required for exciting symmetric and high-density plasma. Simultaneously, the measured reflection coefficients can be used for optimizing the impedance matching between the surfatron and the microwave generators.

3.3 MTEnergy technology in medical applications

MTEnergy's unique ability to measure parameters of multiple coherent signals unlocks new monitoring and control features for multichannel RF/MW medical applications. It enables improvements in:

- Patient alignment in hyperthermia (HT) and microwave ablation (MWA) procedures
- Enhanced models for treatment planning
- Online temperature monitoring without additional invasive probes
- Real-time safety and effectiveness control during ablation

By integrating MTEnergy, next-generation HT and MWA systems can become safer, more precise, and more adaptable—paving the way for broader adoption in clinical oncology.
A note, exploring the benefits of MTEnergy technology application in HT and MWA systems, is available on Andivatech website.

3.4 MTEnergy technology as Hot S-parameters measurement technique

The preceding examples elaborated on the application of MTEnergy technology in characterization and control of multi-channel RF/MW applications. However, the technology is also well-suited for implementing the Hot S-parameters functionality, which is a valuable technique for non-invasive characterization and optimization of various single- and multi- channel RF energy applications.

For instance, certain plasma sources generate plasmas that interacts with the treated substance in the plasma active zone, or in its vicinity. That interaction might alter the operational conditions of the plasma source, and therewith change the load impedance, presented to the generator.

In some use cases, the applied correction strategy is based on tuning the operational RF frequency to a more optimal region of the load's frequency response. However, the traditional RF/MW generator are able only of measuring the load impedance at the instantaneous frequency of

Invented by AndivaTech

operation, and lack any information on its frequency response. Consequently, tuning the frequency of operation for optimal impedance matching is not a straightforward process, and eventually, might lead to further process deterioration.

The Hot S-parameter measurement technique is helpful to address this problem.

Fig. 10. illustrates an example of a conventional Hot S-parameters setup, applied for the characterization of a plasma-jet application. This technique employs a multi-tone signal provided by two different sources: a high-power RF energy generator delivers the large-signal tone, and a vector network analyzer delivers the small-signal one. The latter sweeps the small-signal across the frequency range, in which the reflection coefficient of the plasma source should be analyzed [3],[4].

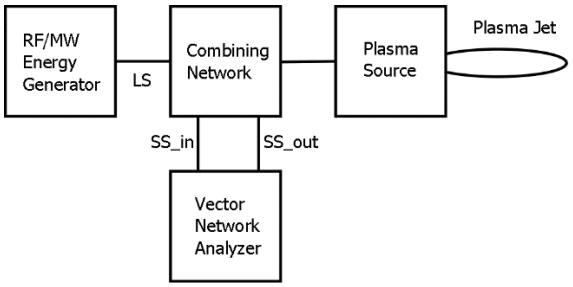

Figure 10. Conventional setup for Hot S-parameters measurements

The Hot-S parameter measurement functionality is inherent to the MTEnergy technology, and the MTEnergy-enabled generators can conduct continuous and non-intrusive measurements of the plasma source input impedance and its frequency response.

The Hot-S parameter functionality involves sweeping* the F_{MOD} used to produce the MT signal. Importantly, this sweep changes only the frequencies of the small-signal tones, ensuring that the process of plasma generation remains undisturbed during the measurement of the reflection coefficient. The reflection coefficient is then calculated using the parameters of the analyzed small-signal tones on $F_{RF+}F_{MOD}$ and F_{RF}-F_{MOD} frequencies. Subsequently, when necessary, the frequency of the large-signal RF/MW tone can be tuned to the newly obtained optimal value.

Of course, and as explained before, in situations where an external tuner is used for impedance matching between the generator and the plasma source, the measured L_{SS} parameters could be used in the algorithms, which govern the impedance matching.

NOTE: The Hot S-parameters technique is applicable and useful also in systems where the MTEnergy technology is applied in multi-channel applications, such as the surfatron plasma generator application.

Conclusion

The developed MTEnergy technology presents a significant innovation in the techniques, used for analysis and control of the solid-state RF/MW energy systems.

It provides a real-time, non-disruptive tool for measuring the parameters of signals, applied in coherent, multi-channel RF/MW energy systems—a feature hitherto unattainable with state-of-the-art architectures.

The technology applies multi-tone signals, consisting of one large- and a few small-signal tones. These MT signals, are generated using appropriate techniques, such as angle modulation, resulting in RF signal with a constant envelop and correlated parameters of its tones.

Invented by AndivaTech

The large-signal tone of every MT signals is coherent with the other large-signal tones in the system. It carries the vast portion of the RF power, generated in the channel, and contributes to the executed process. The associated small-signals tones, are generated on unique, channel-specific frequencies, which allows the measurement of their parameters, applying standard frequency discrimination and signal analysis techniques. Using the well-known relations between MT signal's tones, the parameters of the large-signals tones can be also derived.

The technology offers functional an performants benefits across various RF Energy applications: high-power generators, medical devices, plasma generators, etc., where the synchronization of multiple coherent channels is a paramount requirement.

Furthermore, the measured parameters of the small-signal tones provide all information, necessary for calculation of the transmission and the reflection coefficients (S-parameters) to and from any port in the application.

Additionally, at no extra cost, the technology offers an efficient implementation option for the Hot-S paraments technique, which provides information concerning the frequency response of the load impedance presented to the system, and might be useful in the characterization and/or the operation of various RF energy applications.

Invented by AndivaTech

Appendix 1. Solid-state RF/MW energy systems: comparison of architectures and features

Architecture					Additional HW requirements	Additional control requirements	Features	Drawbacks
Number of channel	Phase control	Phase control loop	Power control parameter	Power control loop				
Single	na	na	Amplitude	Open	na	na		No EM field control pssible, inaccurate PLC**
				Closed	Directional coupler, RF power detectors	na	Accurate PLC, load tracking***	No EM field control
			Time (i.e. by PWM)	Open	na	na	High efficiency ****	No EM field control pssible, inaccurate PLC, limited power control range
				Closed	Directional coupler, RF power detectors	na	Higher efficiency, accurate PLC, load tracking	No EM field control pssible, limited power control range
Multiple	No	na	Time (i.e. by PWM)	Open	na	Pulse synchonization	High efficiency, limited EM field control	Inaccurate PLC, limited power control range
				Closed	Directional coupler, RF power detectors		High efficiency, accurate PLC, load tracking, limited EM field control	Limited power control range
	Coherent	Open	Amplitude	Open	IQ modulator	LF or RF Reference	Complete EM field control	Inaccurate PLC and phase control
				Closed	IQ modulator, Directional coupler, RF power detectors	LF or RF Reference	Complete EM field and PL control, load tracking	Inaccurate phase control
			Time (i.e. by PWM)	Open	IQ modulator	LF or RF Reference, pulse synchonization	Complete EM field control, high efficieny	Inaccurate PLC and phase control, limited power control range
				Closed	IQ modulator, Directional coupler, RF power detectors*	LF or RF Reference, pulse synchonization	Complete PLC and EM field and PL control, load tracking	Inaccurate phase control, limited power control range
		Closed	Amplitude	Open	IQ modulator, Directional coupler	LF or RF Reference	Complete EM field control	Inaccurate PLC
				Closed	IQ modulator, Directional coupler, RF power detectors	LF or RF Reference, pulse synchonization	Complete EM field and PL control, load tracking	none
			Time (i.e. by PWM)	Open	IQ modulator, Directional coupler	LF or RF Reference	Complete EM field control, high efficiency	Complete EM field control, high efficiency
				Closed	IQ modulator, Directional coupler, RF power detectors	LF or RF Reference, pulse synchonization	Complete EM field and PL control, load tracking, high efficiency	Limited power control range

* The IQ demodulator is an excellent amplitude detector. However, it might be complicated to use it simultaneously in the power and phase control algoritms, esspecially in PWM scheme.

** Power level control

*** Load tracking means tuning of the frequency of the applied RF power for mantaining optimal load's impedance matching

**** PWM-based power control scheme allows maintaining high efficiency at lower power levels

Appendix 2. MTEnergy signals examples

The spectrograms depict signals generated in a two channel MW system. CH1 generates MT signal: F_{LS}=5.801GHz, F_{MOD}=39.0625KHz. CH2 generates a coherent CW signal at similar power level, but out of phase. The two signals are combined by a power combiner.

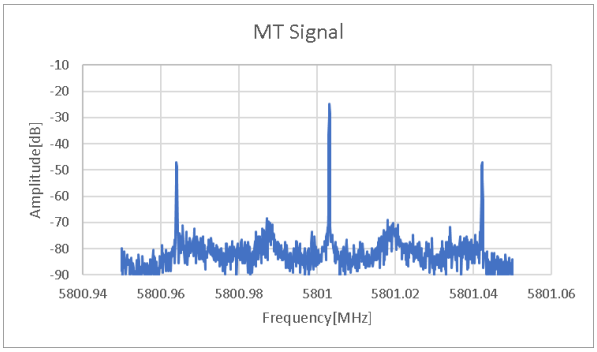

Figure 11a. CH1 MT signal only.

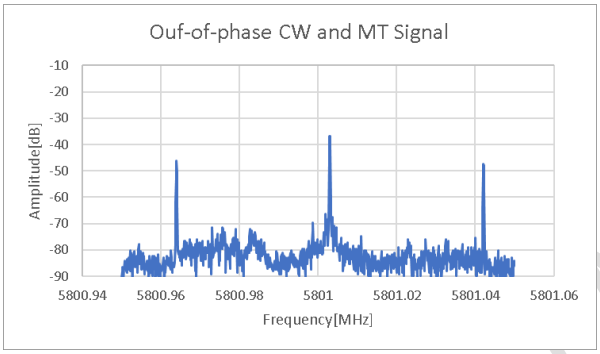

Figure 11b. CH1 MT + CH2 CW, the L_{SS} and CW signals are out of phase.

The comparison of the two spectrograms demonstrates, that, due to the significant phase mismatch, the amplitude of the combined large signal is reduced significantly. At the same time, the small-signals remain constant, therefore the parameters of CH1's MT signal can be measured regardless of the presence of CH2's signal.

Appendix 3. MTEnergy 5.8GHz demonstration platform

AndivaTech developed a 5.8GHz setup, envisioned to demonstrate key features of MTEnergy technology. Fig.12 exhibits its block diagram.

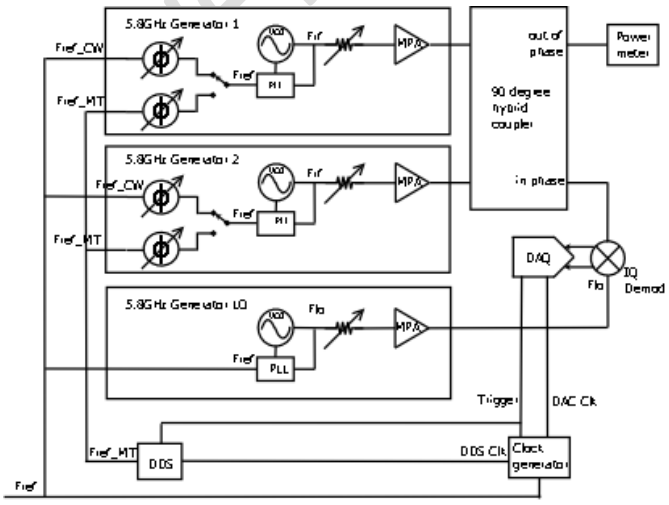

Figure 12. 5.8GHz demonstration platform.

oriented by AndivaTech

The setup comprises 3 identical 5.8GHz low-power generators. Two of them, Generator 1 and Generator 2, are enabled to generate MT MW signals. The third one, Generator LO, generates a CW signal, providing a LO signal for the IQ demodulator. The setup uses an external 20MHz master clock - Fref , which serves as Fref_CW for Generator 1 and 2, Fref for Generator LO, and as a reference signal for the Clock generator. The later generates the DDS and DAQ clocks and a trigger signal, synchronizing the generation and the measurement of the MT signals.

The output signals of Generator 1 and 2 are combined with a 90 degrees hybrid coupler. One of the hybrid's outputs provides a "sampled" signal to be processed with the IQ demodulator. The second output, which in a real application would be the system's output, is connected to a power meter. The power, measured at the second output, can be used in the assessment of the effectiveness of the phase control of the generated MW signals. The phase control is governed by a closed-loop control algorithm, based on the phase measurement of the MT signals.

As noted in §3.1, the MT signals generation method, used in the demonstration platform, is more suitable for applications, where the Frf to Fref ratio is low. In this case, that ratio is rather high – about 290. The large ratio necessitates the use of phase shifters at generators Fref_CW and Fref_MT inputs in order to avoid misalignment between the phases of the CW and MT reference signals. The phase shifters apply digitally trimmed capacitors, controlled by a self-calibration algorithm, invoked at start-up.



Figure 13A. Target phases for Generator 1 and Generator 2

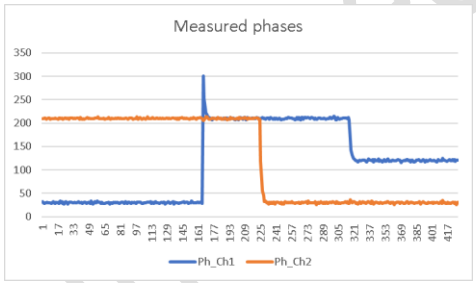

Figure 13B. Measured phases of Generator 1 and Generator 2

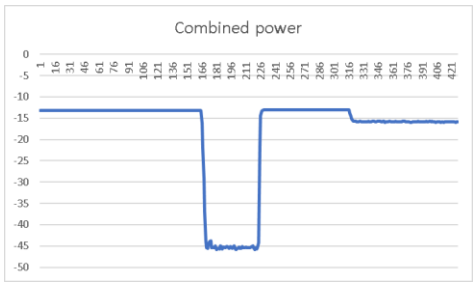

Figure 13C. Measured combined power

Copyright by AndivaTech

	Set_PH_Ch1	Set_PH_Ch2	PH1_Ch1	PH1_Ch2	Meas pwr CW
Step 1	30	210	30	210	-13.2
Step 2	210	210	210	210	-45
Step 3	210	30	210	30	-13.1
Step 4	120	30	120	30	-15.9

Table1. Control steps sequence

Fig.13A shows the target phase values, set in the control algorithm, Fig.13B - the measured phase values of the small-signal tones of both generators. The demonstrator operates in three repetitive time segments. In the first two, the phase of the signals, generated by Generator 1 and 2, are measured, selecting Fref_MT for a reference signal of the measured generator. In the third segment, which can be considered as ”a normal mode of operation”, both generators deliver CW signals (Fref_CW is selected). In this segment, the power meter measures the combined power, which is presented on Fig.13C.

As seen from the graphs, during the measurement, the target phases are set to 4 different values. Table1 summarizes the steady-state phases and power values, measured in each step:

- in Step 1 and 3 the generators signals have opposite phases, therefore they sum-up on the out-of-phase output of the coupler.
- In Step 2, the generators signals are in-phase and they cancel each other at that output. The measured combination loss is about 32dB (the difference between the CW powers measured in Step1/3 and Step 2). Based on the obtained combination loss value, one can calculate, that the phase measurement and control accuracy is within ±3 degrees range.
- In Step 4, the phases of the generators’ signals are offset with 90 degrees. The measured combination loss is about 2.8dB, confirming measurement and control accuracy within ±3 degrees.

In summary, the measurement results, depicted on Fig.13 and in Table.1, demonstrate the potential of MTEnergy technology for accurate measurement of the signals’ parameters in a multi-channel RF/MW energy systems, and its usefulness in the implementation of efficient parametric control mechanisms.

Invented by AndivaTech

info@andivatech.com
www.andivatech.com

About AndivaTech B.V.

AndivaTech is a company, specialized in the field of radio-frequency (RF) and microwave technologies, dedicated to delivering high-quality products, technologies, and services to a diverse clientele, including industrial, scientific, and business customers, engaged in the production or application of Solid-State RF/MW Energy Systems.

Our product portfolio encompasses a range of offerings, from generic, multi-market products to customized solutions tailored to specific applications.

In addition to the product offerings, AndivaTech provides various consultancy, R&D and engineering services to meet the diverse needs of our clients.

References

[1] Q. Shen, R.Huang, Z. Xu, W.Hua, Numerical 3D Modeling: Microwave Plasma Torch at Intermediate Pressure, MDPI Applied Sciences, 2020, https://doi.org/10.3390/app10155393

[2] M.M.Paulides, H.Dobsicek Trefna, S.Curto, D.B.Rodrigues, Recent technological advancements in radiofrequencyand microwave-mediated hyperthermia for enhancing drug delivery Advanced Drug Delivery Reviews, Volumes 163–164, 2020, Pages 3-18, https://doi.org/10.1016/j.addr.2020.03.004

[3] S.Holtrup, A.Sadeghfam, H.Heuermann, P.Awakowicz, Characterization and Optimization Technique for Microwave-Driven High-Intensity Discharge Lamps Using Hot S-Parameters, IEEE TRANSACTIONS ON MICROWAVE THEORY AND TECHNIQUES, 2014 IEEE, 10.1109/TMTT.2014.2342652

[4] E.H.Kemaneci, H.E. Porteanu, I. Stefanović, Modelling of a miniature microwave driven nitrogen plasma jet and comparison to measurements, Plasma Sources Science and Technology, · May 2021,DOI: 10.1088/1361-6595/ac04bc

Invented by AndivaTech